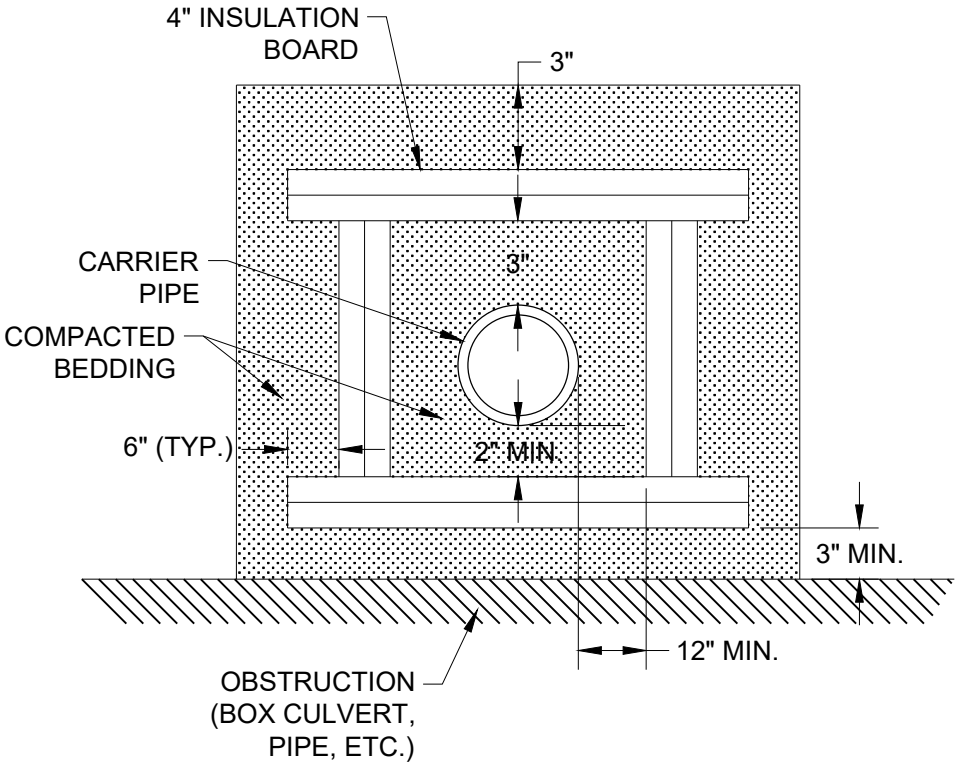

NOTES:

1. ENCASEMENT MUST BE 8 LF MIN. ALONG THE CARRIER PIPE.

2. WHEN STACKING INSULATION BOARDS, STAGGER EACH LAYER SUCH THAT ALL BUTT JOINTS ARE OVERLAPPED BY THE LAYER ABOVE (18" MIN.)

M:\STANDARD SPECS & DETAILS\2025\Details\BED-7_ENCASEMENT INSULATION.dwg

City Plate No.: BED-7	STANDARD DETAILS	City of Minot
Last Revision: 12/18/2020	ENCASEMENT INSULATION	
Section: 2100, 2200, 2300, 2400		